SuperKlean

Environmentally Exceptional Washdown Products

Industrial markets that trust SuperKlean mixing units, nozzles, fittings, and hoses for their sanitation washdown needs:

- Food & Beverage Mfg
- Ice Cream Plants
- Breweries
- Cheese Manufacturers
- Oil Refineries
- Bakery products
- Bread manufacturers
- Cereal and Pasta Products
- Chocolate and Confectionery
- Restaurant Industry
- Soft Drink Makers
- Pharmaceutical
- Distilleries
- Milk & Juice Producers
- Mining
- Cured Meats
- Textile Products
- Food Retailers
- Nutraceuticals/Supplements
- Flavor/Fragrance Industry
- Dairy
- Perfume Makers
- Beverage
- Slaughter Houses
- Orchard and Fruit Producers
- Vegetable Growers / Producers
- Meat Processing
- Seafood Industry
- Poultry Processing
- Snack and Functional Foods

WORLDWIDE HEADQUARTERS

CORPORATE ADDRESS
SuperKlean Washdown Products
1 Edwards Court, Suite 101
Burlingame, CA 94010 USA

EMAIL
sales@superklean.com

DIRECT
(800) 769 - 9173
(650) 375 - 7001

TECHNICAL SUPPORT
(650) 375 - 7001

SHIPPING / LOGISTICS SUPPORT
(650) 375 - 7001

SUPERKLEAN BUSINESS HOURS
8am - 5pm Monday-Friday PST

"The World's Safest and Most Trusted Washdown Brand for Sanitizing Factories and Industrial Plants."

Your Authorized SuperKlean Distributor

Call SuperKlean's Headquarter for a distributor nearest to you.

SuperKlean Washdown Products
1 Edwards Court, Suite 101
Burlingame CA, 94010

ISO 9001:2015 Certified

2021 - 2022
Catalog

SuperKlean

Environmentally Exceptional Washdown Products

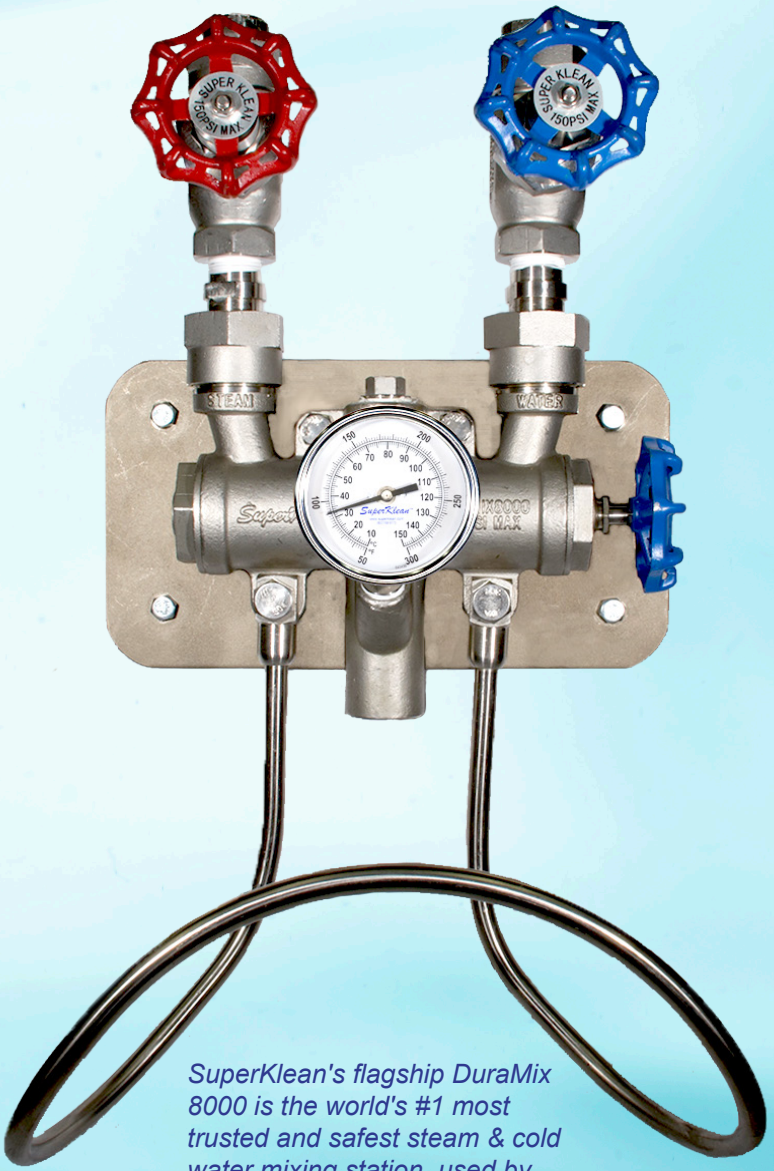

SuperKlean's flagship DuraMix 8000 is the world's #1 most trusted and safest steam & cold water mixing station, used by thousands of leading factories and industrial plants worldwide. (Please see details on page 3)

Please see SuperKlean's wide range of hot water nozzles, along with the industry's #1 choice of swivel adapters on pages 9-20. SuperKlean's industrial-strength nozzles and heavy duty swivel adapters are available off-the-shelf. Also see page 24 for our new line of LifeSpan™ Internal Hose Guards that make your hose investment last longer.

www.SuperKlean.com

Toll Free: (800) 769 -9173 **Direct: (650) 375 - 7001** **Fax: (650) 375 - 7010**

SuperKlean

Environmentally Exceptional Washdown Products

To Our SuperKlean Customers,

SuperKlean has now entered our ***4th decade*** of manufacturing and shipping the world's finest, environmentally superior washdown products to 1000's of the finest distributors and industrial plants and factories worldwide. SuperKlean is considered by hundreds of these top 100 companies (several are shown below) as their most trusted hot water washdown brand.

In the last 18 months, we have seen remarkable resiliency and resolve among hundreds of thousands of successful workers and companies who have kept the consistent movement of safe and wholesome food, beverage, and in many cases, life-saving pharmaceuticals flowing to billions of people. The world thanks you!

During the past year, SuperKlean has experienced an explosion of new Mixing Station orders from these partners led by our DuraMix 8000 family, regarded as the world's safest and most environmentally excellent hot water washdown solution. Now, ASPE (American Society of Plumbing Engineers) and Commercial Plumbers, Industrial and Mechanical Engineering Firms, and most of the Top 100 Food & Beverage Plant and Safety Managers demand SuperKlean's DuraMix 8000 in their new builds. At the same time, Safety Managers are seeking to protect their employees, replacing existing, dangerous steam-leaking mixers with SuperKlean's full line of steam and cold water mixers.

Please enjoy this new SuperKlean catalog that includes more detailed information than ever before. If you are not completely sure of the exact model mixer, industrial nozzle, or hose and hose adapters that are perfect for your application, you are always moments away from talking to a technical expert who will provide immediate answers with product availability for shipment hours later! (Calling 1-800-769-9173 will get you to an actual human who will assist you immediately!)

You can find: SuperKlean Mixers (pages 1-8), SuperKlean Industrial Nozzles (pages 9-17), SuperKlean Hose Adapters (pages 17-20) and SuperKlean Hoses / Accessories / Hose Guards (pages 21-24).

A Big Thank You from The SuperKlean Team!

CELEBRATING 30 YEARS SuperKlean

"The World's Safest and Most Trusted Washdown Brand for Sanitizing Factories and Industrial Plants."

Here are just a few of the fine companies who trust SuperKlean products:

P&G, Coca-Cola, Pfizer, Kroger, Abbott Nutrition, Schreiber, Dr Pepper, Foster Farms, ConAgra Foods, Del Monte Quality, Snyder's Lance, GreyStail Brewing of Rhode Island, Kellogg's, Dannon, Bimbo, grecian delight, McCormick, Tree Top, Hershey, Campbell's, Chevron, Kraft, River Horse, The Cheesecake Factory, Exxon Mobil, General Mills, Heinz, Nestlé, Frito Lay, pepsi

Call (800) 769 - 9173 or (650) 375 - 7001 for a distributor near you or visit our website at:

www.SuperKlean.com

SuperKlean

Environmentally Exceptional Washdown Products

Table of Contents

	Page
Duramix 8000GM-B Series — Bronze Steam & Cold Water Mixing Unit	1
Duramix 8000GM-S Series — Stainless Steel Steam & Cold Water Mixing Unit & Parts	2
SuperKlean Mixing Case Studies	3
Duramix 8000 Features	4
3600M-B Series — Brass Hot & Cold Water Mixing Unit	5
3600M-S Series — Stainless Steel Hot & Cold Water Mixing Unit	6
3600BM Series — Ball Valve Hot & Cold Water Mixing Unit	7
6000M Series — Single Globe / Ball Valve Hot or Cold Water Station	8
DH150S Series — DuraFlow Nozzles & Nozzle Wands	9
DM150S Series — DuraFlow "Mini" Spray Nozzles	10
150 Series — Standard Spray Nozzles	11
150LT Series — Standard "Lite" Spray Nozzles	12
T150 Series — Thermosmart Spray Nozzles	13
DS150S Series — DuraSpray Spray Nozzles	14
Nozzle Replacement Parts	15
Steam Trap & Strainer & $^{3}/_{4}$" Ball Valves	16
8-B & 8LT-B Series — Ball Type Swivel Adapters	17
8 & 8LT Series — Standard Swivel Adapters	18
Mixer Adapters & Temperature Gauge & Other Adapters	19
8-QC, 9-QC, & 8-HY Series — Quick-Connect Fittings	20
DR8 Series — Spring Driven Hose Reels & 11 Series — Hose Racks	21
Custom Hose Assembly Service & Microban Hoses	22
SuperKlean Hoses	23
SuperKlean LifeSpan™ Internal Hose Guards	24

Please visit the SuperKlean YouTube Channel for video tutorials!

BRONZE STEAM & COLD WATER MIXING UNIT
DURAMIX 8000GM-B SERIES

Features:

- **Best Design** - Operates with as little as 30 PSI for water and steam pressure, all the way up to 150 PSI without the need to change internal components, unlike some competitors.
- Dual output design with Secondary Outlet for a secondary hose or piping elsewhere.
- **Safety First** - Automatic shutoff feature built into the design to prevent live steam from passing through the unit. Plant Safety Managers worldwide rate SuperKlean's DuraMix the safest steam unit available!
- **Convenience** - Comes with everything necessary for immediate installation and connection to pipelines.
- **Simple Maintenance** - Only takes 15 minutes to complete preventive maintenance.
- **Industry's Longest Warranty** — 3 years!

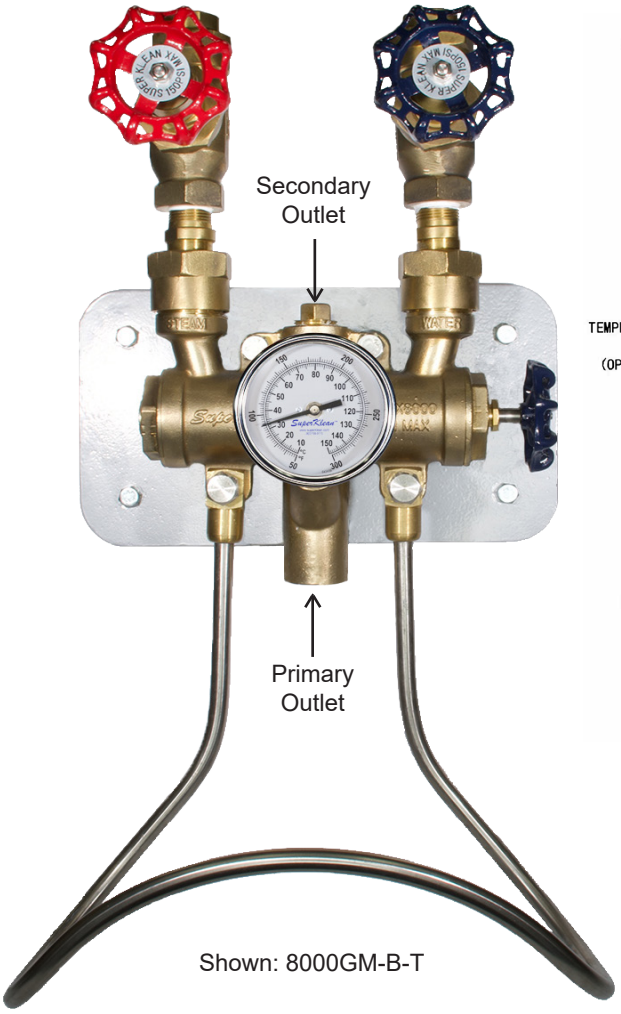

Shown: 8000GM-B-T

Duramix 8000 Technical Drawings

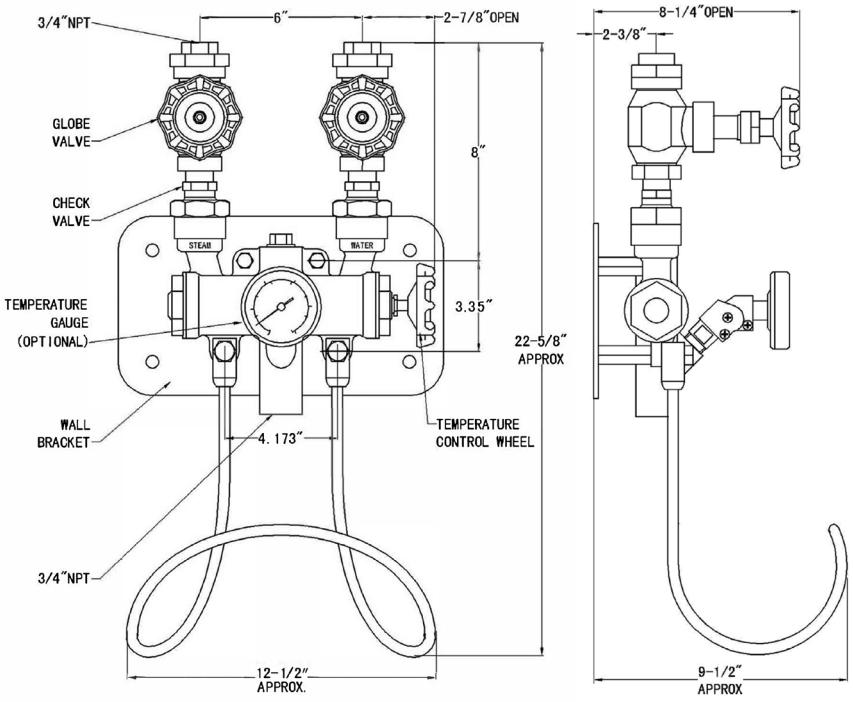

Front view | Side view

Part #	Description
8000GM-B	DuraMix steam and cold water mixing station, bronze, includes 2 globe valves, 2 check valves, hose rack, and mounting plate.
8000GM-B-T	8000GM-B with an adjustable angle temperature gauge.

Principal Parts, Material, and Ratings

Inlet / Outlet diameter: 3/4" NPT
Mixer body: Bronze
Check valves: Bronze / Stainless Steel
Hose Rack: 304 Stainless Steel
Temperature gauge: (optional) Stainless Steel

Recommended Operative Conditions

Working steam pressure (Saturated only): 30-150 PSI
Working water pressure: 30-150 PSI
Maximum water temperature: 200°F (93°C)
Maximum pressure: 150 PSI
Weight: 26 lbs

Scan the QR code to view the product page on our website

Call: (800) 769 - 9173
Visit: www.superklean.com

STAINLESS STEEL STEAM & COLD WATER MIXING UNIT
DURAMIX 8000GM-S SERIES

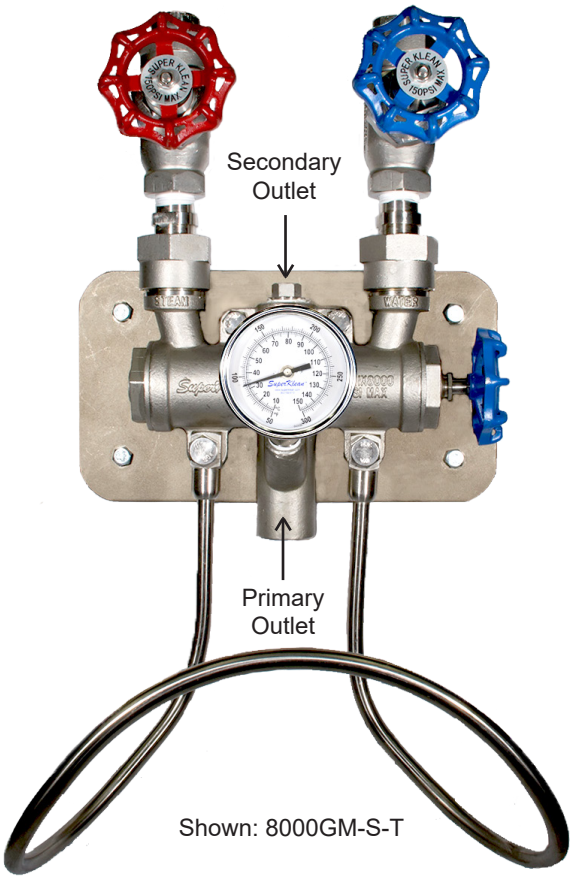

Part #	Description
8000GM-S	DuraMix steam and cold water mixing station, 304 Stainless Steel, includes 2 globe valves, 2 check valves, hose rack, and mounting plate.
8000GM-S-T	8000GM-S with an adjustable angle temperature gauge.

Principal Parts, Material, and Ratings

Inlet / Outlet diameter: 3/4" NPT
Mixer body: 304 Stainless Steel
Check valves: 304 Stainless Steel
Hose Rack: 304 Stainless Steel
Temperature gauge: (optional) Stainless Steel

Recommended Operative Conditions

Working steam pressure (Saturated only):
30-150 PSI
Working water pressure: 30-150 PSI
Maximum water temperature: 200°F (93°C)
Maximum pressure: 150 PSI
Weight: 29 lbs

DURAMIX 8000 INTERNAL DIAGRAM / REPLACEMENT PARTS LIST

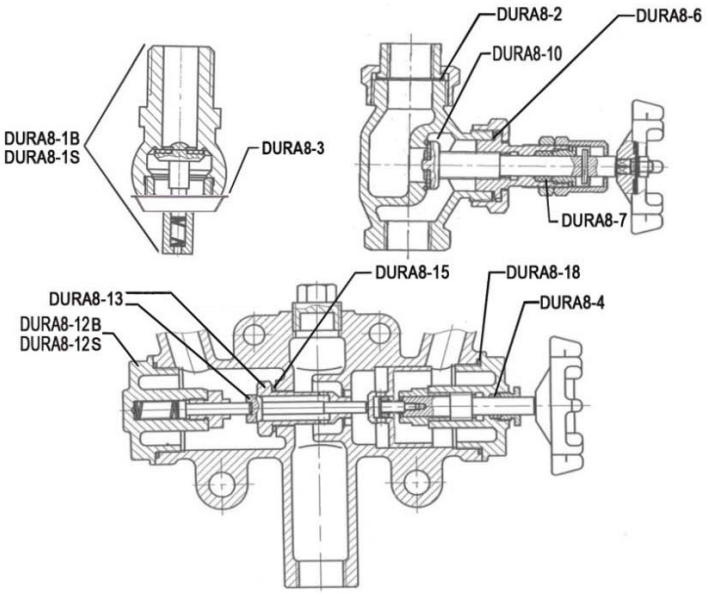

Part #	Description
DURA8-1B	Check valve assembly. Includes check valve poppet, spring, and copper connection gasket. Bronze
DURA8-1S	Check valve assembly. Includes check valve poppet, spring, and copper connection gasket. Stainless Steel
DURA8-2-T	Globe valve connection gasket. PTFE. Cold water
DURA8-2-C	Glove valve connection gasket. Copper. Steam
DURA8-3	Check valve connection gasket. Copper
DURA8-4	Temperature control stem guide. PTFE filling
DURA8-6	Globe valve stem guide nut gasket. PTFE
DURA8-7	Globe valve stem guide PTFE filling
DURA8-10	Globe valve poppet. Stainless Steel
DURA8-12B	Steam chamber cover plate assembly. Bronze
DURA8-12S	Steam chamber cover plate assembly. Stainless Steel
DURA8-13	Steam poppet and poppet seat. Stainless Steel
DURA8-15	Steam poppet seat copper gasket
DURA8-18	Temperature control chamber plate gasket. PTFE

INDEPENDENT TESTING RESULTS OF 5 TOP WASHDOWN SUPPLIERS BY WORLD RENOWNED LEADER IN STEAM SOLUTIONS

In 2008, one of the world's most respected leaders in steam products embarked on a year long in-depth comparison test of the world's best Washdown Units. Their quest? To choose the best Washdown Units to integrate into their famous steam product line.

When you are an undisputed leader in the steam products business sector, it is crucial to make sure that 3rd party products sold in your product line are as excellent or better than the products you manufacture, sell, install, service, and stand behind.

An Exhaustive Search for a Steam Mixer Manufacturer

Creating some of the world's most renowned steam solutions takes decades of building trust with the world's most demanding customers.

A reliable, safe, and cost-effective Washdown Unit was integral to the ongoing success of this world-leading steam company. With over 1,000 dedicated steam engineers on payroll in over 30 different countries, choosing the wrong Washdown supplier could be catastrophic!

In 2009, SuperKlean finally received the great news! After months and months of exhaustive testing, our SuperKlean DuraMix 8000 was chosen by this renowned steam expert to be the best Washdown Unit, over four other worthy suppliers.

SuperKlean's 30 years of dedication to "Continuous Product Improvements" and "*Always Striving for Perfection*" made our company the only one that met or exceeded this steam leader's stringent testing. Twelve years later, SuperKlean is still their trusted partner!

CASE STUDIES AND TESTIMONIALS

Testimonial:
"*SuperKlean's DuraMix 8000 Steam Mixers are the best I have used in my 30 years in the food processing business. They are the Cadillac of mixing stations, and all the others are like Model T's!*"
- Plant Manager for one of America's largest frozen strawberry producers

Case Study #1
This world famous flavoring and fragrance leader struggled with steam mixing stations for decades, controlling temperature of water and most recently fighting steam leaking into hoses through competitors mixing stations. The Plant Safety Manager provided a tour to demonstrate the problem. He said "stand back," picked up a hose and started spraying, with dangerous steam coming out of the nozzle. After 5 seconds or so the steam sputtered with hot water, then finally produced a steady stream of hot water. This company has now replaced over 40 of the competitors steam mixers with SuperKlean DuraMix 8000 units.

Case Study #2
A billion dollar food and condiments manufacturer with over a dozen U.S. locations was having issues with steam leaking into hoses, bursting them, and in one instance, blowing off a nozzle completely.
(See photo of burst hoses at the right.) This Plant Safety Manager is in the process of replacing up to 60 of these competitors steam units with SuperKlean's Duramix 8000. Managers at this company's other locations are now doing the same.

Case Study #3
A worker at a dairy in the Northwest had been spraying and sanitizing, set the hose with nozzle down and came back about an hour later to continue. He mistakenly pointed the nozzle at himself, burning himself with steam that had accumulated in the hose. He needed to be taken for special medical assistance. The distributor who sold the competitors steam units replaced the leaking steam units at this dairy with SuperKlean DuraMix 8000 steam stations.

Call: (800) 769 - 9173
Visit: www.superklean.com

SuperKlean

"The #1 Most Trusted Washdown Brand!"

RATED #1

Based on independent testing by steam industry experts.

INDUSTRY'S ONLY LOCKING MECHANISM

The steam lock nut is used to limit steam flow rate in the scenario that steam pressure is at least twice of water pressure, and the desired hot water temperature is relatively low. After achieving the desired temperature with the temperature hand-wheel, use the lock nut to limit the maximum steam flow rate so the desired temperature can be achieved each time both inlet hand-wheels are turned all the way open.

COMMON MOUNTING DIMENSIONS

Heavy duty mounting plate shares mounting hole specifications with the leading competitive solution.

TECHNICALLY SUPERIOR DESIGN

SuperKlean's powerful and durable inner steam poppet design is a technological work of art. It provides ultimate safety against steam leakage, keeping your operators safe.

SAFEST DESIGN

SuperKlean leads the industry with our exclusive "Safety-First" steam unit design. - never passes live steam even during a sudden interruption of water flow. Without adequate water pressure, the steam poppet forms a seal with its poppet seat, preventing steam from entering the mixing chamber and hose.

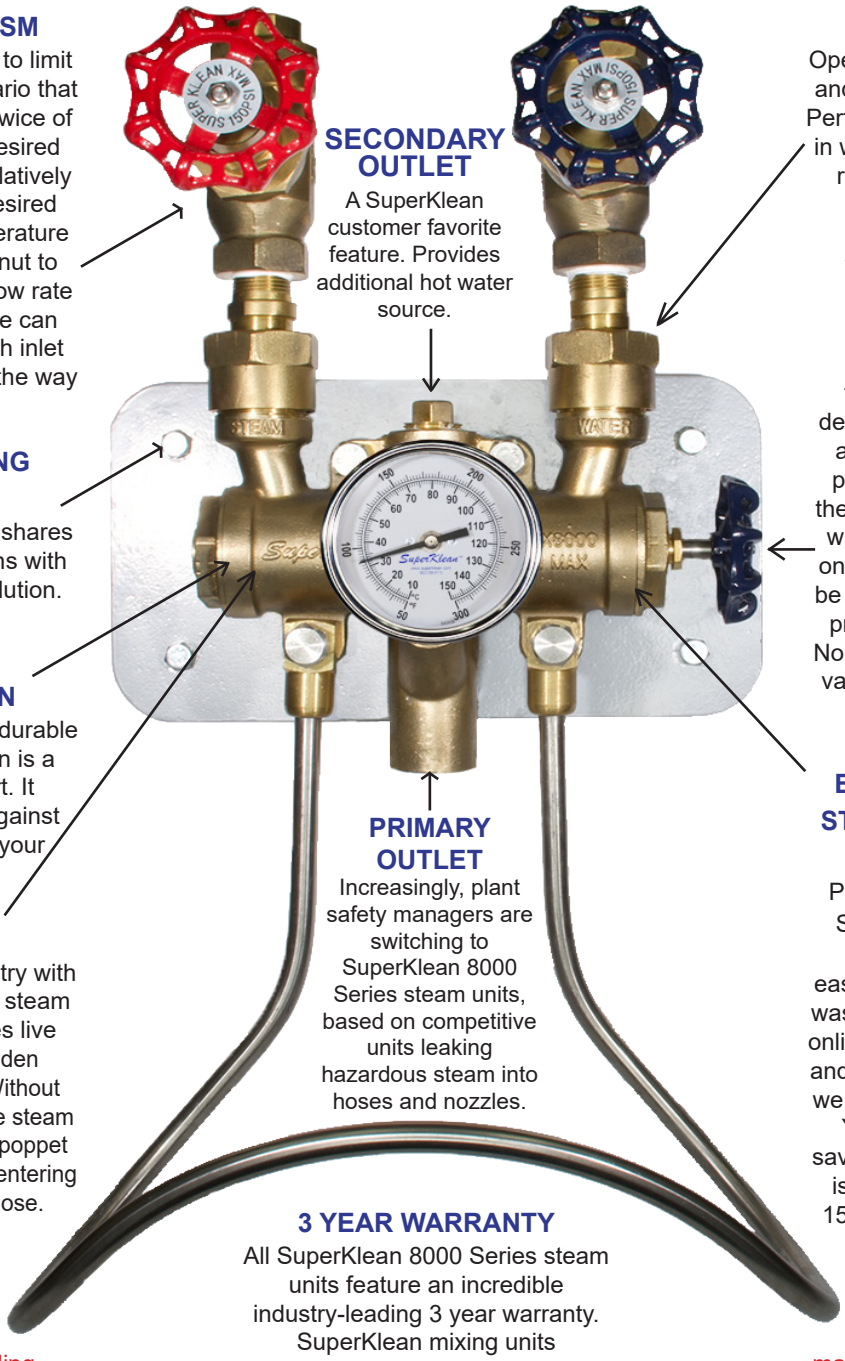

SECONDARY OUTLET

A SuperKlean customer favorite feature. Provides additional hot water source.

PRIMARY OUTLET

Increasingly, plant safety managers are switching to SuperKlean 8000 Series steam units, based on competitive units leaking hazardous steam into hoses and nozzles.

LOW PRESSURE? NO PROBLEM!

Operates on as little as 30 PSI, and all the way up to 150 PSI! Perfect for handling fluctuations in water pressure, over a wide range of piping scenarios.

SET TEMPERATURE ONCE: IMPROVE PRODUCTIVITY!

SuperKlean's temperature hand-wheel design provides a convenient and precise one time temperature adjustment. Once the desired temperature is set with the temperature wheel, only the globe valves need to be fully opened to achieve the previously set temperature. No need to fine tune the globe valves each time you turn on the mixing station!

BY FAR THE EASIEST STEAM MIXING STATION TO MAINTAIN

Preventive maintenance on SuperKlean's 8000 Series steam unit is the fastest, easiest, and lowest cost in the washdown industry! Watch our online 8000 maintenance video and you will be amazed at how we excel over the competition. Your manpower and cost savings over the life of the unit is substantial. All it takes is 15 minutes and one low cost replacement gasket!

3 YEAR WARRANTY

All SuperKlean 8000 Series steam units feature an incredible industry-leading 3 year warranty. SuperKlean mixing units just last longer!

To watch a video regarding "Safest Design" visit YouTube: "SuperKlean DuraMix 8000 Safety Feature Animation"

To see how easy our maintenance is, visit YouTube: "SuperKlean DuraMix 8000 Steam & Cold Water Mixing Station Maintenance"

ALL-IN-ONE PACKAGING

Comes packaged with everything pictured (except the thermometer) for immediate installation and connection to steam/water pipes.

BRASS HOT & COLD WATER MIXING UNIT
3600M-B SERIES

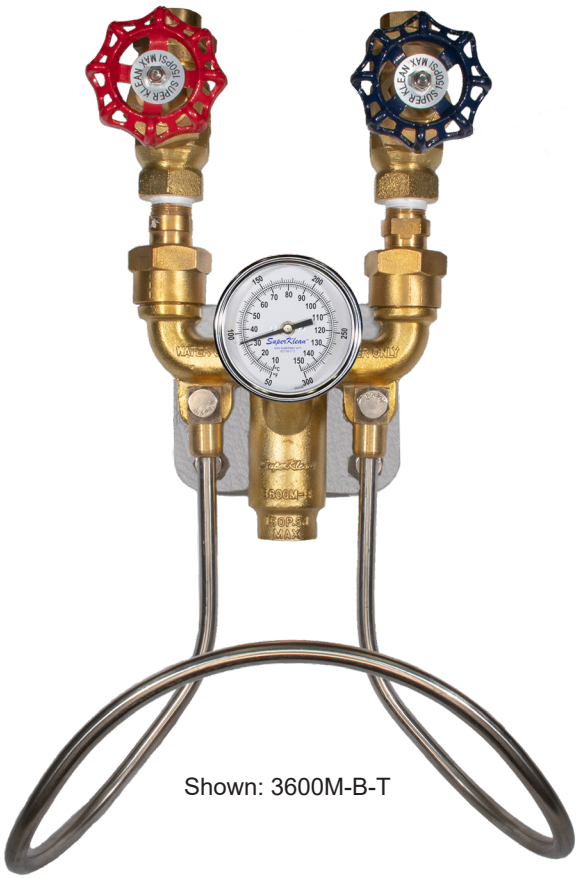

Shown: 3600M-B-T

Features:

- Specially engineered Y-style body with check valves and ball joint unions for superior flexibility during installation.
- Inlet center lines which have the same dimensions as most of our competitors, which grants convenience in installation.
- Includes mounting plate, hose rack, and optional temperature gauge.
- **By far the industry's longest warranty** — 5 years!

Part #	Description
3600M-B	Hot & cold water mixing station, brass, includes 2 globe valves, 2 check valves, hose rack, and mounting plate.
3600M-B-T	3600M-B with an adjustable angle temperature gauge.

Principal Parts, Material, and Ratings

Inlet / Outlet diameter: 3/4" NPT
Mixer Body: Brass
Globe style valves: Brass / Stainless Steel
Check Valves: Brass
Hose rack: 304 Stainless Steel
Temperature gauge: (optional) Stainless Steel
Weight: 20 lbs

Maximum Operative Conditions

Maximum pressure: 150 PSI
Maximum water temperature: 200°F (93°F)

Duramix 8000 Technical Drawings

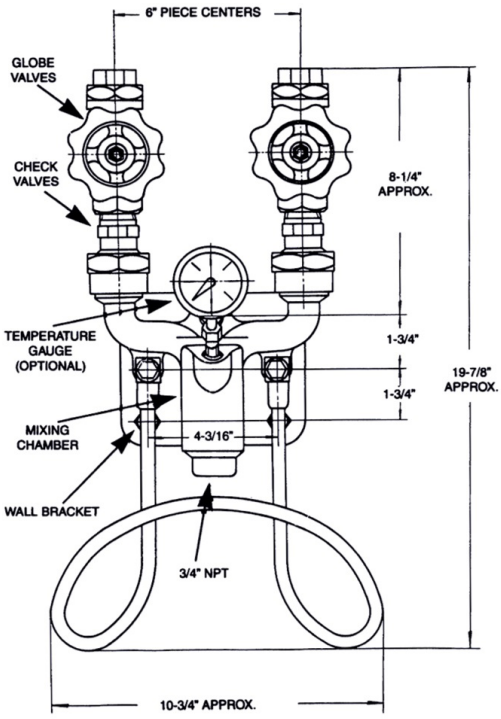

Front view

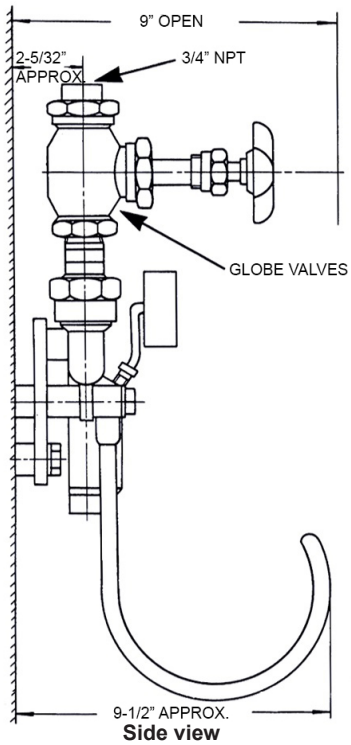

Side view

3600 SERIES MIXERS ARE NOT FOR USE IN STEAM APPLICATIONS

Scan the QR code to view the product page on our website

Call: (800) 769 - 9173
Visit: www.superklean.com

STAINLESS STEEL HOT & COLD WATER MIXING UNIT 3600M-S SERIES

Part #	Description
3600M-S	Hot & cold water mixing station, 304 Stainless Steel, includes 2 globe valves, 2 check valves, hose rack, and mounting plate.
3600M-S-T	3600M-S with an adjustable angle temperature gauge.

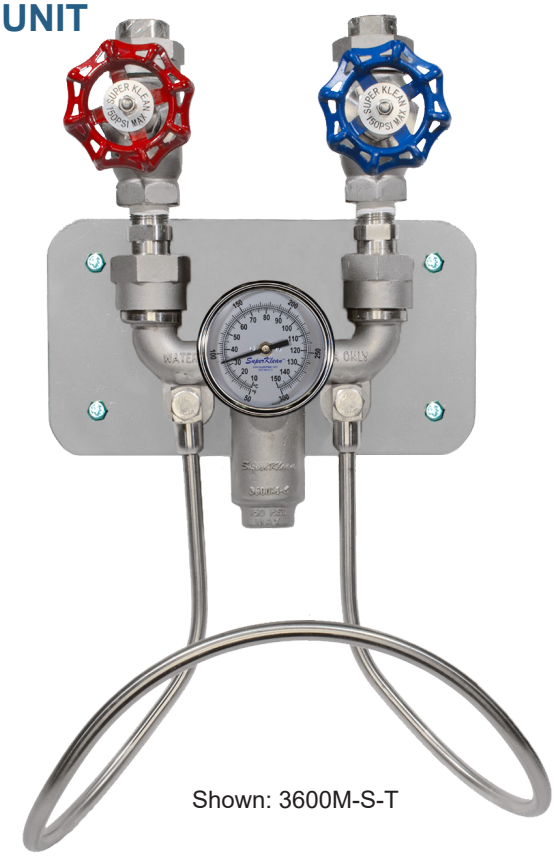

Shown: 3600M-S-T

Principal Parts, Material, and Ratings

Inlet / Outlet diameter: 3/4" NPT
Mixer Body: 304 Stainless Steel
Globe style valves: 304 Stainless Stee
Check Valves: 304 Stainless Steel
Hose rack: 304 Stainless Steel
Temperature gauge: (optional) Stainless Steel
Weight: 24 lbs

Maximum Operative Conditions

Maximum pressure: 150 PSI
Maximum water temperature: 200°F (93°C)

SuperKlean Tip!

SuperKlean 3600 Stainless Steel units cost significantly less than competitors' equivalents, allowing companies to cost effectively move to more preferred Stainless Steel units.

3600 SERIES GLOBE VALVE MIXING STATION REPLACEMENT PARTS LIST

Part #	Description
GVCP-8	Globe valve stem packing (PTFE)
GVCP-9	Globe valve stem nut gasket (PTFE)
GVCP-10	Globe valve poppet (PTFE Seal)
GVCP-11	Globe valve connection nut gasket (PTFE)
GVCP-14	Check valve connection gasket. Copper
HAND WHEEL- (BLUE)	Globe valve hand wheel (Blue)
HAND WHEEL- (RED)	Globe valve hand wheel (Red)
GV-3600-BLUE	Globe valve for hot and cold water mixing unit. Brass. Cold water side.
GV-3600-RED	Globe valve for hot and cold water mixing unit. Brass. Hold water side.
GV-3600-SS-BLUE	Globe valve for hot and cold water mixing unit. Stainless Steel. Cold water side.
GV-3600-SS-RED	Globe valve for hot and cold water mixing unit. Stainless. Hold water side.
CV-WATER-B	Check valve for 3600 series unit, Brass
CV-WATER-S	Check valve for 3600 series unit, Stainless Steel

3600 SERIES MIXERS ARE NOT FOR USE IN STEAM APPLICATIONS

BALL VALVE HOT & COLD WATER MIXING UNIT
3600BM SERIES

Shown: 3600BM-B-T

Features:

- Ball valves for easier shutoff while maintaining its original characteristics.
- Specially engineered Y-style body with check valves and ball joint unions for superior flexibility during installation.
- Inlet center lines which have the same dimensions as most of our competitors.
- Includes mounting plate, hose rack, and optional temperature gauge.
- **By far the industry's longest warranty** — 5 years!

Part #	Description
3600BM-B	Hot & cold water mixing station, brass, includes 2 ball valves, 2 check valves, hose rack, and mounting plate.
3600BM-B-T	3600BM-B with an adjustable angle temperature gauge
3600BM-S	Hot & cold water mixing station, 304 Stainless Steel, includes 2 ball valves, 2 check valves, hose rack, and mounting plate.
3600BM-S-T	3600BM-S with an adjustable angle temperature gauge

Shown: 3600BM-S-T

Principal Parts, Material, and Ratings

Inlet / Outlet diameter: 3/4" NPT
Mixer Body: Brass or 304 Stainless Steel
Ball valves: Bronze or 304 Stainless Steel
Hose rack: 304 Stainless Steel
Temperature gauge: (optional) Stainless Steel
Weight: 16 lbs (Brass)/ 18 lbs (Stainless Steel)

"The Winemakers' Choice!"

Maximum Operative Conditions

Maximum pressure: 150 PSI
Maximum water temperature: 200°F (93°C)

3600 SERIES BALL VALVE MIXING STATION REPLACEMENT PARTS LIST

Part #	Description
GVCP-11	Connection nut gasket (PTFE)
GVCP-14	Check valve connection gasket. Copper
BALL VALVE-BALL SEAT	¾" ball valve ball seat. Pair. PTFE
BALL VALVE-LEV-BLUE	¾" Ball valve lever. Stainless Steel. Blue
BALL VALVE-LEV-RED	¾" Ball valve lever. Stainless Steel. Red
BALL VALVE-BLUE	¾" ball valve, bronze (600 PSIG WOG-150 PSIG Saturated Steam)
BALL VALVE-RED	¾" ball valve, bronze (600 PSIG WOG-150 PSIG Saturated Steam)
BALL VALVE-SS-BLUE	¾" ball valve, Stainless Steel. Bue (600 PSIG WOG-150 PSIG Saturated Steam)
BALL VALVE-SS-RED	¾" ball valve, Stainless Steel. Red (600 PSIG WOG-150 PSIG Saturated Steam)
BALL VALVE-NUT	¾" ball valve nut. Stainless Steel
BALL-VALVE PACKING	¾" ball valve stem packing. PTFE
CV-WATER-B	Check valve for 3600 series unit, brass
CV-WATER-S	Check valve for 3600 series unit, Stainless Steel

Scan the QR code to view the product page on our website

3600 SERIES MIXERS ARE NOT FOR USE IN STEAM APPLICATIONS

Call: (800) 769 - 9173
Visit: www.superklean.com

SINGLE GLOBE / BALL VALVE HOT OR COLD WATER STATION
6000M & 6000BM SERIES

Features:

- Designed specifically to provide individual outlets of hot or cold water.
- Includes mounting plate, hose rack, and optional temperature gauge.
- **By far the industry's longest warranty** — 5 years!

Part #	Description
6000M-B	Single globe valve hot or cold water station, brass, includes hose rack and mounting plate.
6000M-B-T	6000M-B with an adjustable angle temperature gauge
6000BM-B	Single ball valve hot or cold water station, brass, includes hose rack and mounting plate.
6000BM-B-T	6000BM-B with an adjustable angle temperature gauge
6000M-S	304 Stainless Steel, single globe valve hot or cold water wall-mounted station. Includes hose rack and mounting plate.
6000M-S-T	6000M-S with an adjustable angle temperature gauge
6000BM-S	304 Stainless Steel, single ball valve hot or cold water wall-mounted station. Includes hose rack and mounting plate.
6000BM-S-T	6000BM-S with an adjustable angle temperature gauge

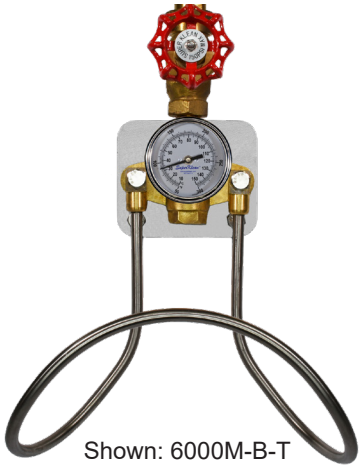

Shown: 6000M-B-T

Shown: 6000BM-B-T

Shown: 6000M-S-T

Shown: 6000BM-S-T

Principal Parts, Material, and Ratings

Inlet / Outlet diameter: 3/4" NPT
Station body: Brass or 304 Stainless Steel
Globe style valve: Brass or 304 Stainless Steel
Ball valve: Bronze or 304 Stainless Steel
Hose rack: 304 Stainless Steel
Weight: 10 lbs (6000BM) or 13 lbs (6000M)

Maximum Operative Conditions

Maximum globe valve pressure: 150 PSI
Maximum ball valve pressure: 600 PSI WOG
Maximum water temperature: 200°F (93°C)

SuperKlean Tip!

SuperKlean offers the optional temperature gauge at an extremely low additional cost. An important feature to ensure maintaining minimum temperature of 160°F or above.

PLEASE REFER TO PAGE 6 FOR GLOBE VALVE REPLACEMENT PARTS AND PAGE 7 FOR BALL VALVE REPLACEMENT PARTS

Note: 6000 Series Water Stations do not have check valves. Check valve related replacement parts do not apply.

6000 SERIES STATIONS ARE NOT FOR USE IN STEAM APPLICATIONS

Scan the QR code to view the product page on our website

DURAFLOW SPRAY NOZZLES
DH150S SERIES

Features:

- Front trigger guard cover designed to prevent accidental spray.
- Trigger lock mechanism built in.
- Designed to unlock if dropped from a standing position
- Quick connect receptacle for accessories.
- 304 Stainless Steel construction with a total weight of 1.53 lbs.
- 1/2” female NPT inlet.
- Compatible with DuraWand.

Part #	Description
DH150S-DB	DuraFlow Nozzle, high flow, 304 Stainless Steel, with front trigger guard & locking trigger mechanism. Dark Blue cover
DH150S-R	Same as above, with Red cover
DH150S-W	Same as above, with White cover

HIGH FLOW:

Inlet pressure (PSIG)	Flow rate (GPM)
25	4.39
50	6.54
75	8.18
100	9.56
125	10.83
150	11.89

LOW FLOW*:

Inlet pressure (PSIG)	Flow rate (GPM)
25	2.93
50	3.86
75	4.91
100	5.78
125	6.71
150	7.19

*Low flow rates can be achieved with the purchase of Flow Restrictor Adapter (Part: 8-FR-NPT)

Rating: 150 PSI / 200°F (93°C)
(Maximum tested operating pressure of 500 PSI)

DURAWAND
NOZZLE WANDS

Features:

- 1.5 or 3 foot 304 Stainless Steel wand length options.
- Adjustable spray pattern wand tip: solid or fan spray.
- Quick connect to any DH series or DS series nozzle.

Part #	Description
DM-WAND	304 Stainless Steel wand with quick disconnect and adjustable spray tip. 1.5 feet
D-WAND	304 Stainless Steel wand with quick disconnect and adjustable spray tip. 3 feet

"Adjustable sliding handle feature"

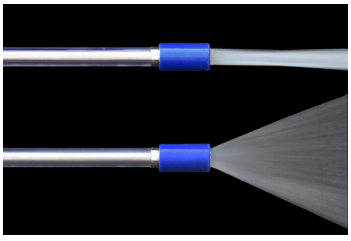

DO NOT CONNECT NOZZLE DIRECTLY TO LIVE STEAM

Scan the QR code to view the product page on our website

Call: (800) 769 - 9173
Visit: www.superklean.com

DURAFLOW “MINI” SPRAY NOZZLES
DM150S SERIES

Features:

- Small, compact design.
- Fully insulated.
- 304 Stainless Steel construction weighs only 1.25 lbs.
- 1/2” female NPT inlet.

Part #	Description
DM150S-DB	DuraFlow “Mini” Nozzle, high flow, 304 Stainless Steel, Dark Blue cover
DM150S-R	Same as above, with Red cover
DM150S-W	Same as above, with White cover

HIGH FLOW:

Inlet pressure (PSIG)	Flow rate (GPM)
25	4.39
50	6.54
75	8.18
100	9.56
125	10.83
150	11.89

LOW FLOW*:

Inlet pressure (PSIG)	Flow rate (GPM)
25	2.93
50	3.86
75	4.91
100	5.78
125	6.71
150	7.19

*Low flow rates can be achieved with the purchase of Flow Restrictor Adapter (Part: 8-FR-NPT)

Rating: 150 PSI / 200°F (93°C)
(Maximum tested operating pressure of 500 PSI)

SuperKlean Tip!

SuperKlean customers love that our "Mini" Spray Nozzles are lightweight and made out of 304 Stainless Steel!

DO NOT CONNECT NOZZLE DIRECTLY TO LIVE STEAM

STANDARD SPRAY NOZZLES
150 SERIES

Features:

- An industry favorite for over 30 years!
- Nozzles are available in brass (3 lbs), aluminum (1.69 lbs), 304 Stainless Steel (2.78 lbs).
- All components are interchangeable with similar brands.
- 1/2” female NPT inlet.
- Durable rubber covers.

150B-DB

150B-R
150A-R
150S-R

150B-W
150A-W
150S-W

150A-LB

150S-G

HIGH FLOW:

Inlet pressure (PSIG)	Flow rate (GPM)
25	4.39
50	6.54
75	8.18
100	9.56
125	10.83
150	11.89

LOW FLOW*:

Inlet pressure (PSIG)	Flow rate (GPM)
25	2.93
50	3.86
75	4.91
100	5.78
125	6.71
150	7.19

*Low flow rates can be achieved with the purchase of Flow Restrictor Adapter (Part: 8-FR-NPT)

Part #	Description
150B-DB	Standard Nozzle, Brass, with Dark Blue cover
150B-R	Same as above, with Red cover
150B-W	Same as above, with White cover
150A-LB	Standard Nozzle, Anodized aluminum with Light Blue cover
150A-R	Same as above, with Red cover
150A-W	Same as above, with White cover
150S-G	Standard Nozzle, 304 Stainless Steel with Gray cover
150S-R	Same as above, with Red cover
150S-W	Same as above, with White cover

SuperKlean Tip!

High flow or low flow? SuperKlean gives you the best of both worlds! Our nozzles are high flow by default, and if desired, you can reduce the flow rate by inserting SuperKlean's low cost Flow Restrictor. (Part: 8-FR-NPT)

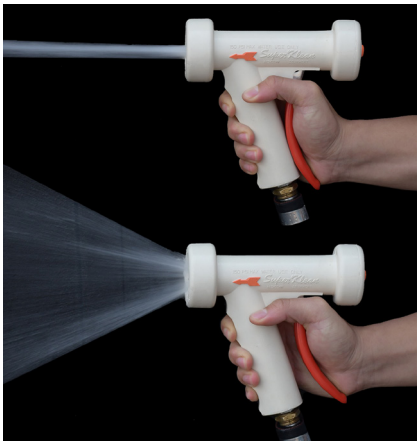

Rating: 150 PSI / 200°F (93°C)
(Maximum tested operating pressure of 500 PSI)

DO NOT CONNECT NOZZLE DIRECTLY TO LIVE STEAM

Scan the QR code to view the product page on our website

Call: (800) 769 - 9173
Visit: www.superklean.com

STANDARD “LITE” SPRAY NOZZLES 150LT SERIES

Features:

- More compact and lighter version of SuperKlean’s popular Standard Nozzle.
- Perfect for applications where reduced size and/or flow rate are preferred.
- SuperKlean ball type swivel adapters available for ultimate, ergonomic operation.
- Special formulated rubber cover for durability and easy replacement.
- Bronze construction weighs only 1.25 lbs.
- 3/8” female NPT inlet.

Inlet pressure (PSIG)	Flow rate (GPM)
25	4.00
50	6.25
75	7.75
100	9.00
125	10.25
150	11.50

Part #	Description
150LTB-DB	"Lite" Nozzle, Bronze, with Dark Blue cover
150LTB-W	Same as above, with White cover
"Lite" Nozzle compatible LifeSpan™ internal hose guard fittings	
HG8LT-5/8-B	Swivel adapter (3/8” NPT x 5/8” hose barb), brass & 304 SS w/ 12" long SS Hose Guard
HG8LT-3/4-B	Swivel adapter (3/8” NPT x 3/4” hose barb), brass & 304 SS w/ 12" long SS Hose Guard

Rating: 150 PSI / 200°F (93°C)
(Maximum tested operating pressure of 500 PSI)

SuperKlean announces a new, reduced size version of our industry favorite 150 Series Standard Spray Nozzle.

This amazing Lite Nozzle has the same industrial strength and rugged features of our Standard Nozzle, but weighs in at a mere 1.25 lbs.

SuperKlean Tip!

Our "Lite" Nozzle has over 91% of the flow rate of our Standard Nozzle, at about 40% of the weight! It is quickly becoming a best seller.

DO NOT CONNECT NOZZLE DIRECTLY TO LIVE STEAM

THERMOSMART SPRAY NOZZLES
T150 SERIES

Features:

- SuperKlean's Thermosmart Spray Nozzles are manufactured with the same characteristics as our Standard Spray Nozzles.
- Features temperature indicating window to prevent water related burns.
- Accurate liquid crystal temperature readout.
- USDA/FDA compliant for correct output temperature.
- Offered in brass, aluminum, and stainless steel.

Part #	Description
T150B-DB	Thermosmart Nozzle, Brass with Dark Blue cover
T150B-W	Same as above, with White cover
T150A-LB	Thermosmart Nozzle, Aluminum with Light Blue cover
T150A-W	Same as above, with White cover
T150S-G	Thermosmart Nozzle, 304 Stainless Steel with Gray cover
T150S-W	Same as above, with White cover

HIGH FLOW:

Inlet pressure (PSIG)	Flow rate (GPM)
25	4.39
50	6.54
75	8.18
100	9.56
125	10.83
150	11.89

LOW FLOW*:

Inlet pressure (PSIG)	Flow rate (GPM)
25	2.93
50	3.86
75	4.91
100	5.78
125	6.71
150	7.19

*Low flow rates can be achieved with the purchase of Flow Restrictor Adapter (Part: 8-FR-NPT)

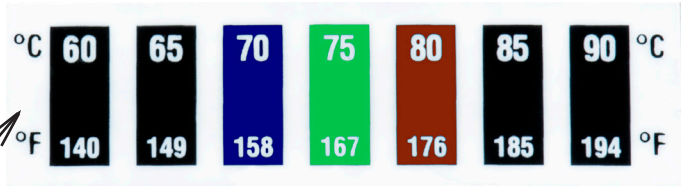

Window turns brown when above the measured temperature.
Window turns green when within 2° F of measured temperature.
Window turns blue when below measured temperature.

Rating: 150 PSI / 200°F (93°C)
(Maximum tested operating pressure of 500 PSI)

SuperKlean Tip!

The USDA is pushing food suppliers to keep washdown water temperatures continuously above 160°F to help eliminate bacteria and contaminants. One glance at our ThermoSmart Nozzle gives an immediate reading! SuperKlean recommends Microban hoses as the perfect accessory for the Thermosmart nozzles. (See page 23 for details)

DO NOT CONNECT NOZZLE DIRECTLY TO LIVE STEAM

Scan the QR code to view the product page on our website

Call: (800) 769 - 9173
Visit: www.superklean.com

DURASPRAY SPRAY NOZZLES
DS150S SERIES

Features:

- Designed for hanging hose applications (from overhead).
- Trigger lock to prevent accidental spraying.
- Quick connect receptacle for accessories.
- 304 Stainless Steel construction weighs only 1.25 lbs.
- 1/2” female NPT inlet.
- Compatible with DuraWand.

Part #	Description
DS150S-DB	DuraSpray Nozzle, high flow, 304 Stainless Steel, with Dark Blue cover
DS150S-W	Same as above, with White cover

HIGH FLOW:

Inlet pressure (PSIG)	Flow rate (GPM)
25	4.39
50	6.54
75	8.18
100	9.56
125	10.83
150	11.89

LOW FLOW*:

Inlet pressure (PSIG)	Flow rate (GPM)
25	2.93
50	3.86
75	4.91
100	5.78
125	6.71
150	7.19

*Low flow rates can be achieved with the purchase of Flow Restrictor Adapter (Part: 8-FR-NPT)

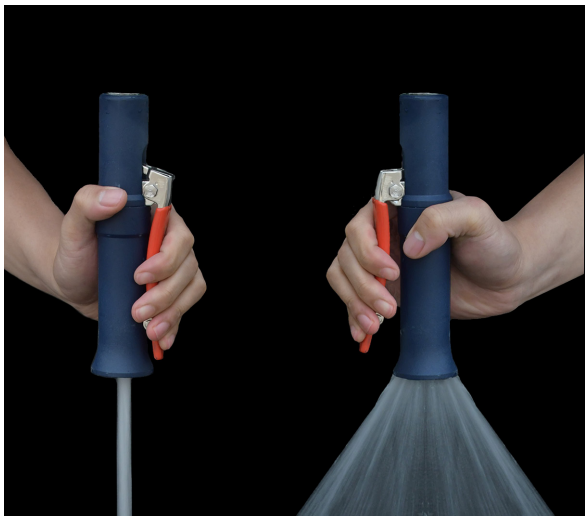

Rating: 150 PSI / 200°F (93°C)
(Maximum tested operating pressure of 500 PSI)

SuperKlean Tip!

SuperKlean's DS Series nozzle is a favorite at meat processing plants worldwide.

DO NOT CONNECT NOZZLE DIRECTLY TO LIVE STEAM

Scan the QR code to view the product page on our website

NOZZLE REPLACEMENT PARTS

Features:

- Interchangeable parts and covers for all nozzles.
- Specially formulated nozzle covers for easy installation, long lasting durability, and resistance to a wide range of oils, fats, and chemicals.
- Fully assembled cartridges containing all internal gaskets and O-rings.
- Most parts are interchangeable with those of our competitors. *(Indicated by the red asterisk)**

Nozzle parts:

Part #	Description
1-B*	Standard Nozzle body, brass one piece, epoxy resin coated
1-A*	Standard Nozzle body, anodized aluminum, one piece, epoxy resin coated
1-S*	Standard Nozzle body, 304 stainless steel, one piece, epoxy resin coated
1-LTB	Lite nozzle body, bronze.
2*	Standard Nozzle Lever, 304 stainless steel
2-LTS	"Lite" nozzle lever, stainless steel.
2-DHS	DuraFlow lever, 304 stainless steel
2-DMS	DuraFlow “Mini” lever, 304 stainless steel
2-DSS	DuraSpray lever, stainless steel. Plastic dip
3*	Lever bolt, bushing & nut, 304 stainless steel
3-LT	"Lite" nozzle lever bolt & nut, stainless steel.
3-DH	DuraFlow nozzle lever bolt, stainless steel
3-DM	DuraFlow "Mini" nozzle lever bolt, stainless steel
3-DS	DuraSpray nozzle lever bolt, stainless steel
5-S*	Cage or “thrust collar,” 304 stainless steel
6*	Lock screw or “end adapter,” 304 stainless steel
6-LT	"Lite" nozzle end adapter, stainless steel.
7-B*	Cartridge or “barrel assembly,” brass, contains all working parts
7-S*	Cartridge or “barrel assembly,” 304 stainless steel, contains all working parts
7-LTS	"Lite" nozzle barrel assembly, stainless steel.
7-DHS	DuraFlow cartridge or “barrel assembly,” 304 stainless steel, contains all working parts
7-DMS	DuraFlow “Mini” cartridge or “barrel assembly,” 304 stainless steel, contains all working parts
7-DSS	DuraSpray cartridge or "barrel assembly", stainless steel

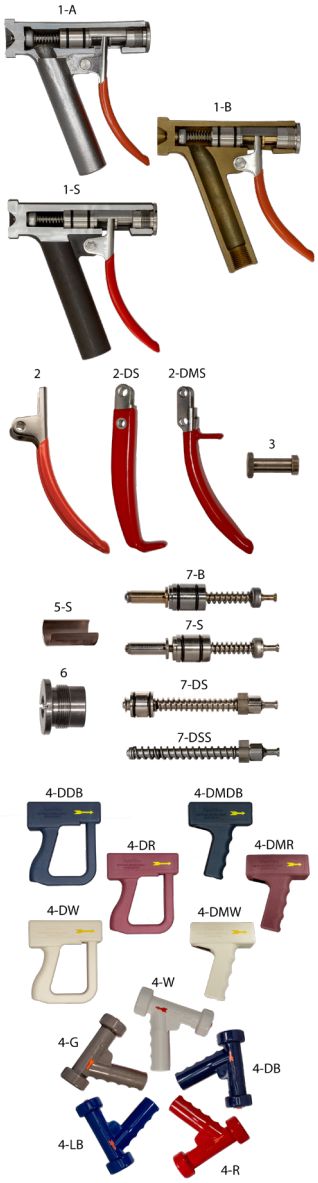

Nozzle Covers

Part #	Description
4-DB*	Standard Nozzle cover, dark blue
4-LB*	Standard Nozzle cover, light blue
4-G*	Standard Nozzle cover, gray
4-R*	Standard Nozzle cover, red
4-W*	Standard Nozzle cover, white
4-LTDB	Lite nozzle cover, dark blue (150LT nozzle).
4-LTW	Lite nozzle cover, white (150LT nozzle).

Part #	Description
4-DHDB	DuraFlow Nozzle cover, dark blue
4-DHR	DuraFlow Nozzle cover, red
4-DHW	DuraFlow Nozzle cover, white
4-DMDB	DuraFlow “Mini” Nozzle cover, dark blue
4-DMR	DuraFlow “Mini” Nozzle cover, red
4-DMW	DuraFlow “Mini” Nozzle cover, white
4-DSDB	Nylon cover, dark blue (DS)
4-DSW	Nylon cover, white (DS)

Scan the QR code to view the product page on our website

Please visit the SuperKlean YouTube Channel for video tutorials on rebuilding all SuperKlean Nozzles!

Call: (800) 769 - 9173
Visit: www.superklean.com

STEAM TRAP & STRAINER
ST8000-SS & SS8000-SS

Scan the QR code to view the product page on our website

Steam Trap

Strainer

Steam Trap Features:

- Thermodynamic steam trap - simple design, efficient and reliable
- Integral strainer and replaceable seat for easy maintenance

Strainer Features:

- 20 mesh screen to keep most debris from entering sensitive equipment. Debris may cause damage and or mal-function to equipment

Part #	Description
ST8000-SS (Steam trap)	3/4” disc type steam trap. Includes internal strainer. 304 Stainless Steel
SS8000-SS (Strainer)	3/4” Y-type strainer. 304 Stainless Steel

Principal Parts, Material, and Ratings

Inlet / Outlet diameter: 3/4” NPT
Body: 304 Stainless Steel
Gaskets: Copper
Screen: 20 mesh
Blow down valve opening: 1/2” NPT

Maximum steam pressure (saturated only): 600 PSI
Maximum water pressure: 600 PSI
Maximum steam temperature: 800°F (427°C)
Weight: 1.5 lbs (steam trap) or 1 lb (strainer)

3/4” BALL VALVES

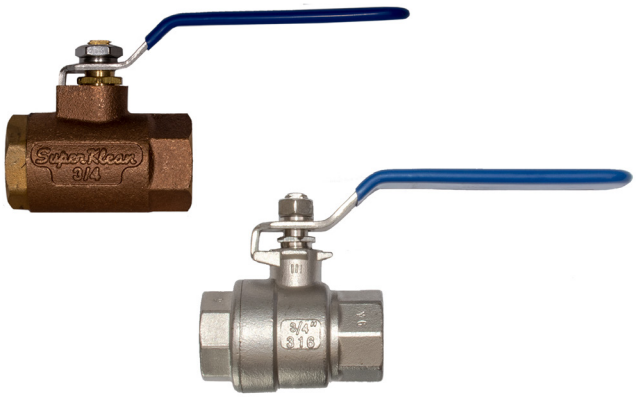

Features:

- Single pull open or shutdown ability.
- Bronze or Stainless Steel construction for water, oil, gas, or steam.

Part #	Description
BALL VALVE-BLUE	3/4” ball valve, bronze, blue lever
BALL VALVE-RED	3/4” ball valve, bronze , red lever
BALL VALVE-SS-BLUE	3/4” ball valve, Stainless Steel, blue lever
BALL VALVE-SS-RED	3/4” ball valve, Stainless Steel, red lever

Principal Parts, Material, and Ratings

Retainer: Brass or Stainless Steel
Gland nut: Brass or Stainless Steel
Stem: Brass or Stainless Steel
Lever nut: Stainless Steel
Body seal: Stainless Steel
Pressure rating: 600 PSI WOG / 150 PSI STEAM
Weight: 1.28 lbs

Inlet / Outlet diameter: 3/4” NPT
Ball valve body: Bronze or Stainless Steel
Lever and grip: Plated steel / Stainless Steel with vinyl
Stem packing: PTFE
Stem bearing: PTFE
Ball: Chrome plated
Seats: PTFE

SuperKlean Tip!

SuperKlean ball valves are incredibly high quality, and available at great prices!

Scan the QR code to view the product page on our website

BALL TYPE SWIVEL ADAPTERS
8-B & 8LT-B SERIES

Features:

- 360° multi-axis swivel rotation to prevent hose kinking and results in better ergonomics.
- Allows natural movement of the wrist with decreased fatigue for the operator.
- 2 1/4” long hose shank/barb for a safer and more secure installation.
- Lock O-ring (instead of the traditional C-ring found on many competitors' swivel adapters) to secure swivel head. The O-ring is not a separate part and does not loosen or fall off.
- Built-in lock ring keeps nozzle trigger depressed, which minimizes hand fatigue.

SuperKlean Tip!

SuperKlean's ball type swivel adapters are a best-selling item! They are dependably rugged, and make the operator's job so much easier. Once customers try it, they become "ball-type" advocates.

SuperKlean Tip!

SuperKlean's hose barbs are the longest in the industry, allowing two hose bands to be attached, preventing the hose from being separated. For increased safety, dual hose bands or external sleeves are recommended. (See photos on page 24)

Ball type swivel adapters:

Part #	Description	W/ Hose Guard Part #*
8-B1/2-B	Ball type swivel adapter (1/2” NPT x 1/2” hose barb), brass & 304 SS	N/A
8-B1/2-S	Ball type swivel adapter (1/2” NPT x 1/2” hose barb), 304 SS	N/A
8-B5/8-B	Ball type swivel adapter (1/2” NPT x 5/8” hose barb), brass & 304 SS	N/A
8-B5/8-S	Ball type swivel adapter (1/2” NPT x 5/8” hose barb), 304 SS	**HG8-B5/8-S**
8-B3/4-B	Ball type swivel adapter (1/2” NPT x 3/4” hose barb), brass & 304 SS	**N/A**
8-B3/4-S	Ball type swivel adapter (1/2” NPT x 3/4” hose barb), 304 SS	**HG8-B3/4-S**

Ball type swivel adapters (for 150 “Lite” Series Nozzles only):

Part #	Description	W/ Hose Guard Part #*
8LT-B1/2-B	Ball type swivel adapter (3/8” NPT x 1/2” hose barb), brass & 304 SS	N/A
8LT-B5/8-B	Ball type swivel adapter (3/8” NPT x 5/8” hose barb), brass & 304 SS	N/A
8LT-B3/4-B	Ball type swivel adapter (3/8” NPT x 3/4” hose barb), brass & 304 SS	N/A

*To learn more about SuperKlean's hose guards, please refer to page 24.

Scan the QR code to view the product page on our website

Call: (800) 769 - 9173
Visit: www.superklean.com

STANDARD DURALIFE SWIVEL ADAPTERS
8 & 8LT SERIES

Features:

- 360° swivel rotation to prevent hose kinking.
- 2 1/4” long hose shank/barb for a safer and more secure installation.
- Lock O-ring (instead of the traditional C-ring found on many competitors' swivel adapters) to secure swivel head. The O-ring is not a separate part and does not loosen or fall off.
- Built-in lock ring keeps nozzle trigger depressed, which minimizes hand fatigue.

Standard swivel adapters:

Part #	Description	W/ Hose Guard Part #*
8-GHT-B	Swivel adapter (1/2” NPT x 3/4” FGHT), brass & 304 SS	N/A
8-GHT-S	Swivel adapter (1/2” NPT x 3/4” FGHT), 304 SS	N/A
8-1/2-B	Swivel adapter (1/2” NPT x 1/2” hose barb), brass & 304 SS	N/A
8-1/2-S	Swivel adapter (1/2” NPT x 1/2” hose barb), 304 SS	N/A
8-5/8-B	Swivel adapter (1/2” NPT x 5/8” hose barb), brass & 304 SS	**HG8-5/8-B**
8-5/8-S	Swivel adapter (1/2” NPT x 5/8” hose barb), 304 SS	**HG8-5/8-S**
8-3/4-B	Swivel adapter (1/2” NPT x 3/4” hose barb), brass & 304 SS	**HG8-3/4-B**
8-3/4-S	Swivel adapter (1/2” NPT x 3/4” hose barb), 304 SS	**HG8-3/4-S**

Standard swivel adapters (for 150 “Lite” Series Nozzles only):

Part #	Description	W/ Hose Guard Part #*
8LT-GHT-B	Swivel adapter (3/8" NPT x 3/4" FGHT), brass & 304 SS	N/A
8LT-1/2-B	Swivel adapter (3/8” NPT x 1/2” hose barb), brass & 304 SS	N/A
8LT-5/8-B	Swivel adapter (3/8” NPT x 5/8” hose barb), brass & 304 SS	**HG8LT-5/8-B**
8LT-3/4-B	Swivel adapter (3/8” NPT x 3/4” hose barb), brass & 304 SS	**HG8LT-3/4-B**

*To learn more about SuperKlean's hose guards, please refer to page 24.

3-PIECE MIXER ADAPTERS & ADJUSTABLE ANGLE TEMPERATURE GAUGE

Features:

- 2 1/4” long hose shank/barb for a safer and more secure installation.
- Stainless Steel adjustable angle temperature gauge provides an accurate reading of the water exiting mixing units.

Scan the QR code to view the product page on our website

Part #	Description
9-1/2-B	3-piece mixer adapter (3/4” NPT x 1/2” hose barb), brass
9-1/2-S	3-piece mixer adapter (3/4” NPT x 1/2” hose barb), 304 Stainless Steel
9-5/8-B	3-piece mixer adapter (3/4” NPT x 5/8” hose barb), brass
9-5/8-S*	3-piece mixer adapter (3/4” NPT x 5/8” hose barb), 304 Stainless Steel
9-3/4-B	3-piece mixer adapter (3/4” NPT x 3/4” hose barb), brass
9-3/4-S*	3-piece mixer adapter (3/4” NPT x 3/4” hose barb), 304 Stainless Steel
10	Temperature gauge, 304 Stainless Steel w/ 1/2" NPT thread, and safety plastic cover

*Optional SuperKlean hose guards are available for these parts. Please refer to page 24 for more information.

FGHT HOSE BARB SWIVEL ADAPTERS 8-FGHT SERIES

Features:

- FGHT 360° swivel rotation to prevent hose kinking.
- 2 1/4” long hose shank/barb for safer and more secure installation.

Scan the QR code to view the product page on our website

Part #	Description
8-FGHT1/2-B	Swivel adapter (3/4” FGHT x 1/2” hose barb), brass & 304 Stainless Steel
8-FGHT1/2-S	Swivel adapter (3/4” FGHT x 1/2” hose barb), 304 Stainless Steel
8-FGHT5/8-B*	Swivel adapter (3/4” FGHT x 5/8” hose barb), brass & 304 Stainless Steel
8-FGHT5/8-S*	Swivel adapter (3/4” FGHT x 5/8” hose barb), 304 Stainless Steel
8-FGHT3/4-B*	Swivel adapter (3/4” FGHT x 3/4” hose barb), brass & 304 Stainless Steel
8-FGHT3/4-S*	Swivel adapter (3/4” FGHT x 3/4” hose barb), 304 Stainless Steel

*Optional SuperKlean hose guards are available for these parts. Please refer to page 24 for more information.

MNPT-MGHT ADAPTERS NPT-BSPT ADAPTERS FLOW RESTRICTIORS

Features:

- 3/4” MNPT x MGHT designed to complement our FGHT hose barb adapters, with the ability to make a 3/4” MNPT swivel.
- Once attached to any FGHT hose barb adapter, 360° swivel rotation prevents hose kinking.
- ½” Flow Restrictors to reduce water flow rate, MNPT to female BSPT or MNPT to FNPT

Flow Restrictors

Scan the QR code to view the product page on our website

Part #	Description
8-ADAPT-B	3/4” male NPT x 3/4” male GHT adapter, brass
8-ADAPT-S	3/4” male NPT x 3/4” male GHT adapter, 304 Stainless Steel
8-ADAPT-FB-SPT	½” male NPT x ½” female BSPT adapter. 304 Stainless Steel.
8-ADAPT-MB-SPT	½” male BSPT x ½” female NPT adapter. 304 Stainless Steel.
8-FR-BSPT	½” male NPT x ½” female BSPT flow restrictor adapter. 304 Stainless Steel.
8-FR-NPT	½” male NPT x ½” female NPT flow restrictor adapter. 304 Stainless Steel.

Call: (800) 769 - 9173
Visit: www.superklean.com

QUICK-CONNECT FITTINGS
8-QC SERIES FITTINGS

Scan the QR code to view the product page on our website

Features:

- SuperKlean 8-QC Series Fittings are 304 Stainless Steel high-flow couplings.
- 8-QCF Series Couplers sustain pressure up to 200 PSI.
- Connects with 8-QCM Series Nipples.
- 2 1/4” long hose shank/barb for a safer and more secure installation.

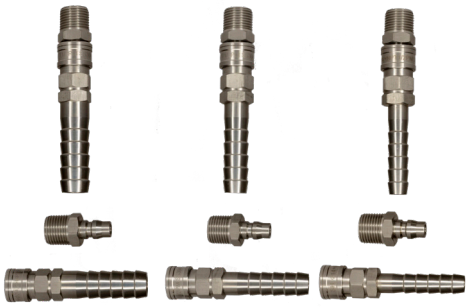

Part #	Description
8-QCF-1/2	Coupler with 1/2” hose barb
8-QCF-5/8	Coupler with 5/8” hose barb
8-QCF-3/4	Coupler with 3/4” hose barb
8-QCM	Nipple with 1/2” MNPT connection

9-QC SERIES FITTINGS

Features:

- SuperKlean 9-QC Series Fittings are 304 Stainless Steel high-flow couplings.
- 9-QCF Series Couplers sustain pressure up to 200 PSI.
- Connects with 9-QCM Series Nipples.
- 2 1/4” long hose shank/barb for a safer and more secure installation.

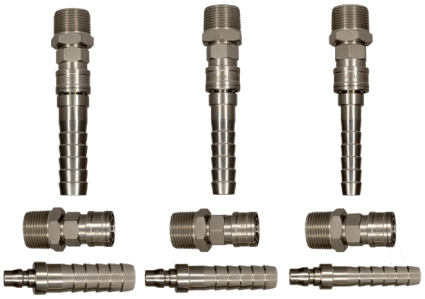

Part #	Description
9-QCM-1/2	Nipple with 1/2” hose barb
9-QCM-5/8	Nipple with 5/8” hose barb
9-QCM-3/4	Nipple with 3/4” hose barb
9-QCF	Coupler with 3/4” MNPT connection

8-HY SERIES ISO 16028 FLAT FACE INTERCHANGEABLE COUPLINGS

Features:

- 8-HY Series Couplers are interchangeable in accordance with ISO 16028. Service pressure up to 3000 PSI.
- Applications include Mobile Construction, Agriculture, General Industrial, Mining, etc.
- Non-spill design ensures no fluid loss or contamination of Hydraulic circuit during connect/disconnect process.
- 8-HY Series Couplings are made with zinc-plated steel.

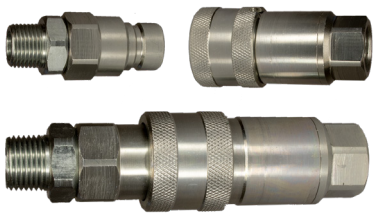

Part #	Description
8-HY1/2-MNPT	Nipple with 1/2” MNPT connection
8-HY1/2-FNPT	Coupler with 1/2” FNPT connection

Scan the QR code to view the product page on our website

SPRING DRIVEN HOSE REELS
DURAREEL DR8 SERIES

Scan the QR code to view the product page on our website

Features:

- Dual axle support system with a 1” axle for increased stability, reduction of vibration, and structural integrity.
- Sturdy single pedestal chassis and frame to accommodate 50’ of any of our hose assemblies.
- Professional grade heavy duty steel with durable powder coat finish or professional heavy duty electro-polished Stainless Steel.
- Ribbed discs with rolled edges which are CNC spun to provide strength, safety, and durability.
- Standard 90° 1/2” NPT inlet swivel connection in either brass or Stainless Steel.
- Guide arm that adjusts to wall, floor, vehicle and overhead positions and has a solid, one-piece heavy gauge 1/4” base and support post for maximum stability.
- Enclosed factory tuned and matched cartridge-style spring motor with non-corrosive Stainless Steel spring, pawl, and multi-position lock ratchet mechanism.
- Usually available off the shelf

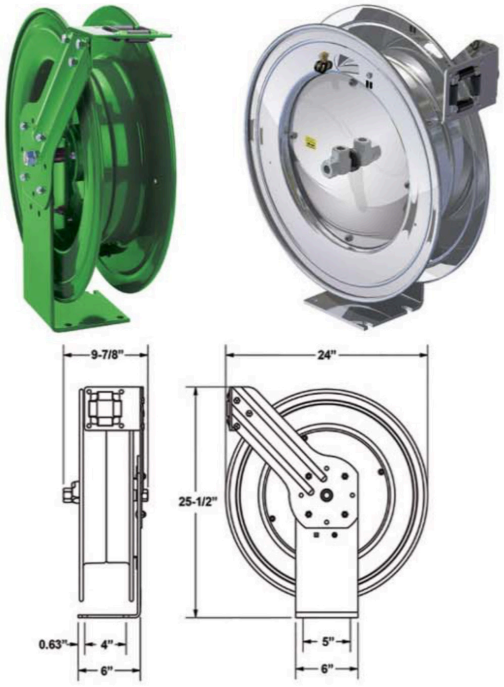

Part #	Description
DR8	Powder coated heavy duty steel spring driven hose reel
DR8S	Electro-polished heavy duty Stainless Steel spring driven hose reel

Principal Parts, Material, and Ratings

Inlet / Outlet diameter: 1/2” NPT
Material: Powder coated steel (304 Stainless Steel)
Electro-polished steel (316 Stainless Steel)
Weight: 69 lbs

Maximum Operative Conditions

Maximum water pressure: 300 PSI
Maximum water temperature: 200°F (93°C)
Maximum hose length: 50’ @ 3/4” ID

HOSE RACKS

Features:

- 304 Stainless Steel construction which is corrosion resistant in most applications and environments.
- Aluminum epoxy coated & Stainless Steel mounting plates designed for quick, easy installation and meets the required spacing between wall to plate and plate to unit.

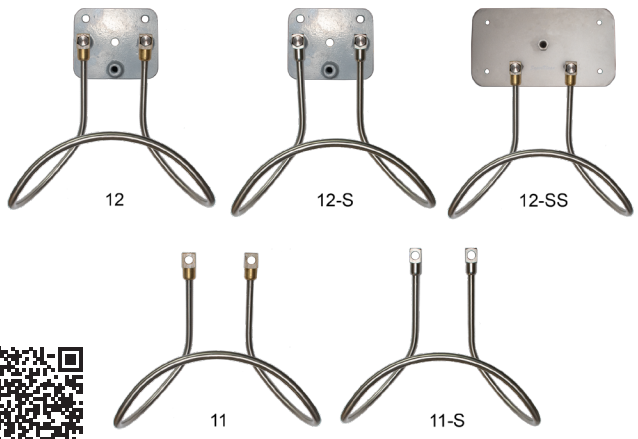

Part #	Description
11	Hose rack for unit mounting, stainless steel with brass end adapters, includes bolts
11-S	11 with stainless steel end adapters
12	Hose rack for wall mounting, stainless steel with brass end adapters, includes epoxy coated aluminum mounting plate and bolts
12-S	12 with stainless steel end adapters
12-SS	12-S with stainless steel mounting plate, bolts and anchor bolts

Scan the QR code to view the product page on our website

Call: (800) 769 - 9173
Visit: www.superklean.com

CUSTOM HOSE ASSEMBLY SERVICE

For over 30 years, SuperKlean has provided our partners and customers with complete custom-assembled hose services, featuring the highest quality hoses available. We professionally assemble hoses and fittings to exact customer specifications and ship within 24-48 hours. Our quality is unmatched, with decades of positive reviews supporting that fact.

Here are some reasons to trust SuperKlean's Custom Hose Assembly Service:

- SuperKlean ships your order within 24-48 hours. Sometimes the same day!
- You can trust our highly professional hose assembly to pay attention to your exact details.
- SuperKlean drop-ships to any location in the world. Saves shipping costs!
- We professionally double band or crimp hoses to your exact needs and specifications.
- Optional hose guard available - prolongs hose life by reducing wear around the hose barb (see page 24)
- Your custom assembled hose arrives with SuperKlean's own world-class fittings.
- SuperKlean stocks a wide variety of hoses and colors.
- We now carry leading-edge MICROBAN antibacterial hoses (see below for details).
- SuperKlean also ships spring-driven hose reels with your custom assembled hose v-installed on the reel.
- Perfect for food processing, beverage, dairy, wineries, breweries, oil, gas, etc.

If you have any technical questions please call SuperKlean at (800) 769 - 9173.
One of our friendly and knowledgeable technicians will be immediately available to assist you.

MICROBAN HOSES
FEATURING ANTIMICROBIAL TECHNOLOGY

Over the past few years, our customers have told us that bacteria are becoming more difficult to fight in many plants and factories. SuperKlean listened and now ships two versions of specially formulated Microban washdown hoses that inhibits growth of bacteria, mold, mildew, and fungi that can cause odor, stains, or degradation of the hose cover.
Assemblies available in lengths of 25', 50', 75', and 100'. Hoses are also available in 500ft. reels without fittings.

Part #	Inner Diameter	Max Pressure*	Cover Color	Cover Material	Tube Material	Reinforcements
MBW	3/4"	300 PSI	White	Smooth EPDM	EPDM	Spiral textile
	Super Sani-Wash 300 — Economical Microban hose for hot water washdown in food processing plants, dairies, packing houses, bottling plants, breweries, canneries, and creameries					
MBY	3/4"	300 PSI	Yellow	Carbyn rubber	Nitrile	Spiral synthetic yarn
	Fortress 300 — Microban antibacterial protection, super abrasion & oil resistant cover for maximum protection against the adverse effects of oil and animal fats					

*Warnings: Couplings attached with bands or clamps may reduce working pressure of the hose assembly to less than the maximum rated working pressure of the hose. Refer to the NAHAD Industrial Hose Assembly Guideline.

SuperKlean Tip!

Our Microban hoses are only marginally more expensive than standard hoses, but last much longer!

SuperKlean now ships custom Microban antibacterial hoses with fittings pre-installed.

SUPERKLEAN HOSES

Features:

- Flexible, lightweight, economical, durable, and safe construction.
- Your choice of standard adapters on every assembly made.
- Assemblies available in lengths of 25', 50', 75', and 100'. Hoses are also available in 400ft. reels without fittings.
- Wide variety of hose constructions and materials to suit all of your washdown needs.
- Custom assembled hoses professionally made to your exact specifications, with fittings of your choice, can be drop-shipped anywhere in the world within 24-48 hours.

*Shown with optional stainless steel fittings and optional hose guard

Part #	Inner Diameter	Max Pressure*	Cover Color	Cover Material	Tube Material	Reinforcements
UW	3/4"	300 PSI	White	Smooth EPDM	EPDM	4 textile plies
	Economical, flexible, lightweight washdown hose for hot water and mild chemicals in cleaning and washdown applications. White hoses are often a favorite at dairies, breweries, and distilleries					
UB	3/4"	300 PSI	Black	Smooth EPDM	EPDM	4 textile plies
	Economical, flexible, lightweight washdown hose for hot water and mild chemicals in cleaning and washdown applications. Black hoses are often used in environments with considerable dust and dirt					
UR	3/4"	300 PSI	Red	Smooth EPDM	EPDM	4 textile plies
	Economical, flexible, lightweight washdown hose for hot water and mild chemicals in cleaning and washdown applications. Red hoses are chosen based on individual company preference in many different industries					
UY	3/4"	500 PSI	Yellow	Smooth Nitrile	Nitrile	4 aramid plies
	Premium washdown hose, yellow abrasion and oil resistant cover, for hot water and mild chemicals in cleaning and washdown applications. Often specified in harsh environments					
UBS	5/8"	300PSI	Black	Wrapped EPDM	EPDM	2 plies poly
	Durable wrapped finish cover, heavy duty washdown hose for hot water and mild chemicals in cleaning and washdown applications. Used in dusty or dirty environments for many industries					
URS	5/8"	300PSI	Red	Wrapped EPDM	EPDM	2 plies poly
	Durable wrapped finish cover, heavy duty washdown hose for hot water and mild chemicals in cleaning and washdown applications. Red longer-lasting hoses for companies that prefer this color					
UWS	5/8"	300PSI	White	Wrapped EPDM	EPDM	2 plies poly
	Durable wrapped finish cover, heavy duty washdown hose for hot water and mild chemicals in cleaning and washdown applications. A favorite in dairies or applications needing longer-lasting hoses					

*Warnings: Couplings attached with bands or clamps may reduce working pressure of the hose assembly to less than the maximum rated working pressure of the hose. Refer to the NAHAD Industrial Hose Assembly Guideline.

ALL HOSES HAVE A MAXIMUM WATER TEMPERATURE RATING OF 200°F
HOSES NOT FOR USE WITH LIVE STEAM

Scan the QR code to view the product page on our website

Call: (800) 769 - 9173
Visit: www.superklean.com

SUPERKLEAN LIFESPAN™ INTERNAL HOSE GUARDS

It is very common that industrial hoses are assembled using fittings similar to SuperKlean fittings found on pages 17, 18, and 19. Under normal use, the inside of a hose constantly rubs against the bottom edges of the hose barb of the fitting, causing the hose to eventually burst at that location. Many washdown applications require the use of high temperature hot water, causing the wear and tear effects to be more pronounced, because hot water causes the hose to soften.

Premature hose failure can be costly in terms of replacement and production line down-time. SuperKlean LifeSpan hose guards can shield your hose against sharp edges at the end of the fittings, that may cut through the hose. This helps ensure your hose can meet or exceed its expected life span. Industrial hoses using internal hose guards can last up to 3 times longer, potentially savings of hundreds of dollars per hose assembly.

SuperKlean LifeSpan Hose Guard Features:

- SuperKlean LifeSpan Hose Guards ensure hoses meet or exceed their designed life span.
- LifeSpan Hose Guards feature SuperKlean's unibody lock O-ring fittings that ensure these swivel fittings never come apart.
- SuperKlean LifeSpan Hose Guards include our highly-rated, unique fittings, featuring extra-long 2 1/4" long hose barbs. This allows 2 bands instead of one, ensuring hose assemblies are well secured.

Part #	Description
Swivel Adapter w/ LifeSpan Hose Guard	
HG8-5/8-B	8-5/8-B w/ 12" long SS Hose Guard
HG8-5/8-S	8-5/8-S w/ 12" long SS Hose Guard
HG8-3/4-B	8-3/4-B w/ 12" long SS Hose Guard
HG8-3/4-S	8-3/4-S w/ 12" long SS Hose Guard
HG8-FGHT 5/8-B	8-FGHT 5/8-B w/ 12" long SS Hose Guard
HG8-FGHT 5/8-S	8-FGHT 5/8-S w/ 12" long SS Hose Guard
HG8-FGHT 3/4-B	8-FGHT 3/4-B w/ 12" long SS Hose Guard
HG8-FGHT 3/4-S	8-FGHT 3/4-S w/ 12" long SS Hose Guard
HG8LT-5/8-B	8LT-5/8-B w/ 12" long SS Hose Guard (for 150 Lite Series Nozzles Only)
HG8LT-3/4-B	8LT-3/4-B w/ 12" long SS Hose Guard (for 150 Lite Series Nozzles Only)

Ball Type Swivel Adapter w/ LifeSpan Hose Guard	
HG8-B5/8-S	8-B5/8-S w/ 12" long SS Hose Guard
HG8-B3/4-S	8-B3/4-S w/ 12" long SS Hose Guard

3 Piece Mixer Adapter w/ LifeSpan Hose Guard	
HG9-5/8-S	9-5/8-S w/ 12" long SS Hose Guard
HG9-3/4-S	9-3/4-S w/ 12" long SS Hose Guard

SuperKlean Tip!

SuperKlean LifeSpan™ Internal Hose Guards are taking the industry by storm. Extends the life of your hose, reducing lifetime hose costs. Reduce enviromental impact with less hose replacements!

Scan the QR code to view the product page on our website